RoHS
COMPLIANT

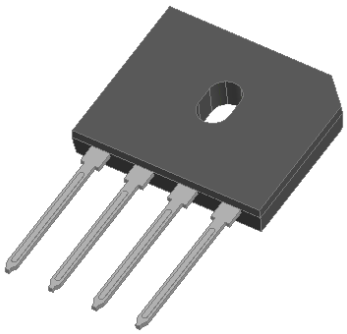

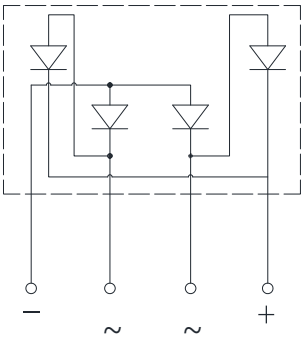

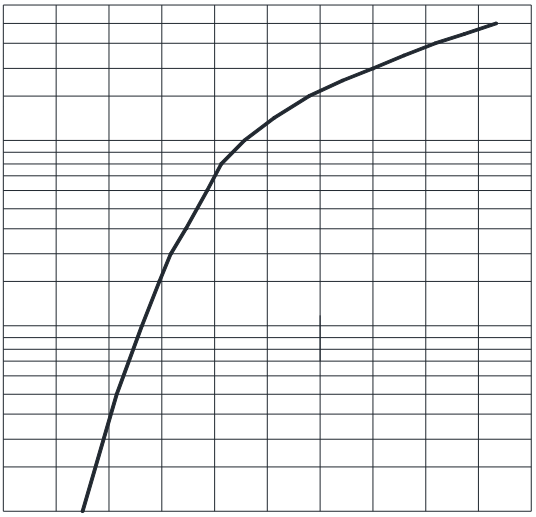

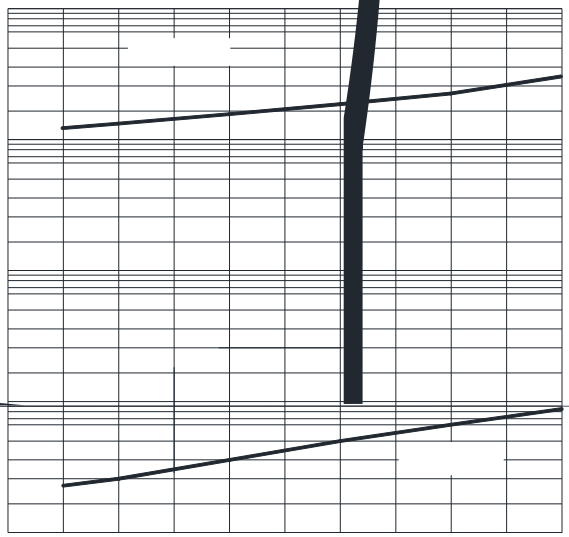

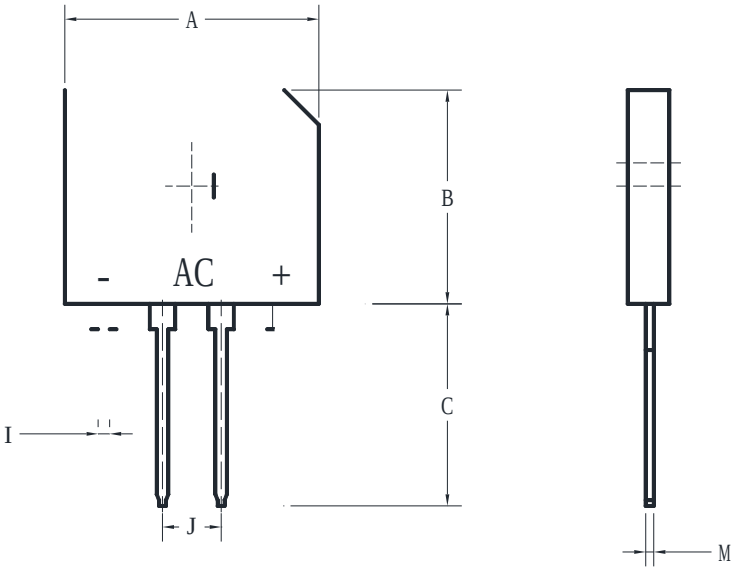
A
B
C
AC
-
+
I
J
M